F:\RD\R14\DWG5\208E

Ra JIS 0.2 1.6 6.3 25

GENERAL TOLERANCE
0.5~5 ± 0.1
6~30 ± 0.2
31~120 ± 0.3
121~320 ± 0.5
321~1000 ± 0.8

CROSS

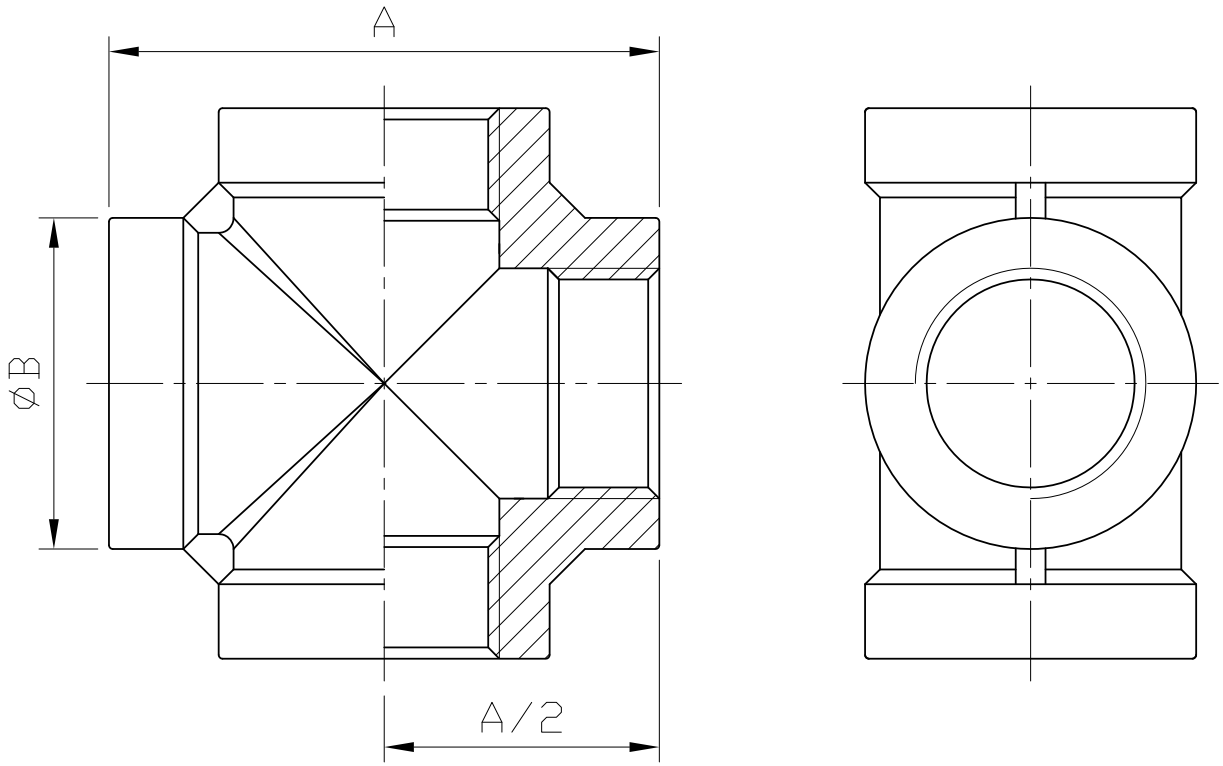

SIZE	1/8"		1/4"		3/8"		1/2"		3/4"		1"		1-1/4"		1-1/2"		2"		2-1/2" (NPT)		2-1/2" (PS)		3"		4"	
	mm	in	mm	in	mm	in	mm	in	mm	in	mm	in	mm	in	mm	in	mm	in	mm	in	mm	in	mm	in	mm	in
A	34.1	1.34	38	1.5	44	1.73	55	2.17	62.5	2.46	73	2.87	85.5	3.37	89.5	3.52	107	4.21	126	4.96	126	4.96	143	5.63	180	7.09
B	14.8	0.58	18.2	0.72	22.1	0.87	28.8	1.13	33.5	1.32	42	1.65	50	1.97	57	2.24	69.5	2.74	85	3.35	87	3.43	99.5	3.92	126	4.96
Weight	kg	lb	kg	lb	kg	lb	kg	lb	kg	lb	kg	lb	kg	lb	kg	lb	kg	lb	kg	lb	kg	lb	kg	lb	kg	lb
	0.037	0.082	0.056	0.123	0.08	0.176	0.16	0.353	0.22	0.485	0.365	0.805	0.48	1.058	0.57	1.257	0.9	1.984	1.606	3.541	1.606	3.541	2	4.409	3.3	7.275

Tolerance: ±0.5mm(1/8"~2")
±0.8mm(2-1/2"~4")

Revise	Description	Date	Approve
3			
2			
1			

SERVICE METAL
Pipe Fittings, Flanges & Valves

CHECK BY	DRAWING BY	DATE	SPECIFICATION	Cross
	Ray	Oct.12.2020	MATERIAL	304/316
			PROCESS/Nr.	
			UNIT / SCALE	mm

DRAWING NO. F05 -20